CBC GROUP

https://www.ganzsecurity.eu

SPECIFICATIONS

GANZ®

PixelPro Network Camera
5 Megapixel Dome Series

PixelPro AI

Features:

- Deep Learning based AI capable
- Fine tuned ISP (Image Signal Processor)
- H.265 Multiple profile streaming support
- Various bitrate control: CBR/ VBR/ VBR+
- Plug & Play with Pixelmaster NVR
- ONVIF profile S support
- Aluminum Die-casting with IP66

AI Features

- Human detector
- Object detector

PixelPro AI

PixelPro Network Camera
5 Megapixel Dome Series

SPECIFICATION

Model	ZNC-VD5F28DL
Image sensor	1/2.8" CMOS Progressive scan
Effective pixel	2592x1944
Min. Illumination	Color: 0.004 Lux @ (F2.0, AGC ON)
Electronic Shutter	Auto/Manual, 1/4 ~ 1/10000s
IR distance	20m
Day & Night	Auto (ICR) / Color / B/W / Schedule
Pan / Tilt / Rotation	353° / 70° / 176°
Focal Length / Focus	2.8 / Fix
Aperture	F2.0
Iris	Fixed Iris
Angle of View FOV (H/V/D)	101.8/57.2/120.6 (4M) 101.8/74.6/132.1 (5M)
Video Compression	H.264 / H.265
Video Frame rate	2592x1520 30fps / 2592x1944 20fps
Video Bit rate control	CBR/VBR/VBR+
BLC	Yes
3DNR	Yes
WDR	Yes, TWDR
White balance	ATW / Manual
Audio compression	G.711
Network	10/100Mbps
Protocol	IPv4, IPv6, IGMP, ICMP, ARP, TCP, UDP, DHCP, RTP, RTSP, RTCP, DNS, DDNS, NTP, SMTP, FTP, UPnP, HTTP, HTTPS, SSL/TLS
Compatibility	ONVIF (Profile S), CGI
Management software	DMS
Alarm In/Out	1 / 1
Audio In/Out	1 / 1
Storage	microSD
Power supply	PoE / DC12V
Power consumption	6.3W
Operating Temperature	-20°C ~ 50°C
Ingress Protection	IP66
Vandal Resistance	IK10
Dimensions	ø114mm x 81.81mm
Net weight	450g
Gross weight	600g

DIMENSIONS (unit:mm)

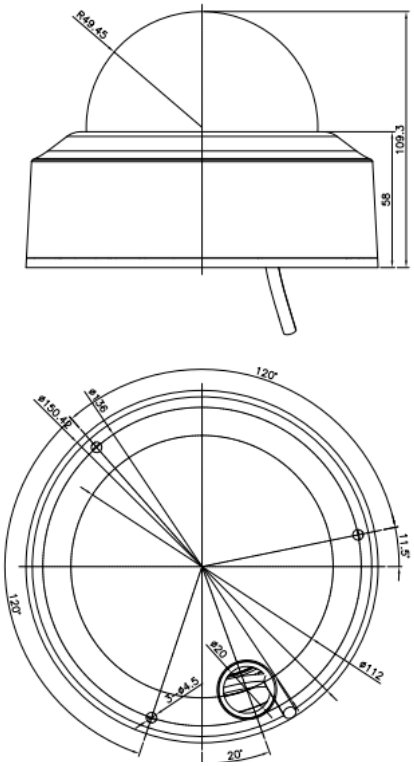

Licence Info

License	Prequisite	Descriptiom
ZNS-AI-A00	Included	Algorithm optimized for the differentiation of persons and objects

Video

Click here for Videos and further Information

COMPATIBLE WITH:

PIXEL MASTER
GANZ DIGIMASTER MP Multi-Format Recorder
GANZ CORTROL
ONVIF

ACCESSORY

Model	ZA-JB-M	ZA-SRC
Type	Junction Box	Sun-/Rain Cover

CBC GROUP
GANZ

Subject to technical changes and errors. 032020 v1.1

CBC (Europe) GmbH
Hansaallee 191
D-40549 Düsseldorf
T: +49-(0)211 53 06 70
F: +49-(0)211 53 06 71 80
info@cbc-europe.com
www.cbc-europe.com

CBC (Poland) Sp.z.o.o
Oddzial w Warszawie
ul. Anny German 12
PL-01-794 Warsaw
T: +48-(0)22 6 33 90 90
F: +48-(0)22 6 33 90 60
info@cbcpoland.pl
www.cbcpoland.pl

CBC Russia Moscow Rep. office
Office 503B World Trade Center
12 Krasnopresnenskaya nab.
RU-123610 Moscow
T: +7-495 258 2161
F: +7-495 258 2160
info@cbc.ru
www.cbc.ru

CBC EUROPE S.r.l.
Via Umberto I, 69
I-20814 - VAREDO (MB)
T: +39-0362 36 50 79
F: +39-0362 4 00 12
info@cbceurope.it
www.cbceurope.it

CBC (EUROPE) GmbH UK Branch
Churchill House, Suite 81
137-139 Brent Street
London NW4 4DJ UK
T: +44-(0)20 8457 2618
info@cbcuk.com
www.cbc-europe.com

*Exact products and specifications shown may vary by geographic and subject to change without notice. Actual products may differ from the images appearing in the specification sheet.